Occam

Concurrency as the foundation of
good programming

Overview

- Communicating Sequential Processes
- The Occam approach
- The Occam language
- Concurrent applications with Occam
- Occam for Linux – KRoC
- Occam Operating System

Occam

- Occam based on Communicating Sequential Processes (CSP) formalism developed by Tony Hoare, Oxford, UK, and an experimental language by David May, Bristol, UK
- Designed to have a formal semantics suitable for automatic program transformations
- Many groups investigated direct translation of Occam into hardware

Cosmetics

- Keywords are in CAPITAL letters
- Variables may include ’.’s
  - This.is.a.variable.name
- Scope is marked with indent spaces
  - No { } is uses
- Occam is line oriented
- Comments are anything following --

Occam Processes

- Not processes as we know them from operating systems
- More like procedures
- Or atomic blocks
- Think of them as structured actions
- EVERY LINE IS A PROCESS!!!

Structure

The structure of a program is a process with declarations preceding it.

<declares>
<process>

```
INT j:
SEQ
  j := 1
  j := j + 1
```

Types

- INT – Integers
- BOOL – Boolean
- BYTE – Characters
- REAL32 – Float
- REAL64 – Double

Arrays

- [<size>]+ of <type> <variable>
- `[42] of INT a:`
  - `a[0] := 1`
- `[42][42] of REAL32 b:`
  - `b[0][0] := 0 (REAL32)`

Assignments

- Uses `:=`
  - Just like Pascal does
- <variable> := <expression>
- `x := y + 1`

Boolean Expressions

- NOT a – True if a is false
- a AND b – True if both a and b are true
- a OR b – True if a or b is true
- a >< b – True if one is true and the other is false

Bit wise operators

- NOT a – Logical inversion of all bits
- a \/ b – Logical or
- a /\ b – Logical and
- a >< b – Logical exclusive or
- a<<b – Shift a b-bits left
- a>>b – Shift a b-bits right

Comparisons

- = -- Equals
- > -- Larger than
- < -- Less than
- <> -- Not equal
- >= -- Larger than or equal
- <= -- Less than or equal

An Example

$$\mathbf{d := (a \wedge (p < q)) \vee (b \wedge (p = q)) \vee (c \wedge (p > q))}$$

Mathematical Expressions

- `+ -- Sum`
- `- -- Difference`
- `* -- Product`
- `/ -- Quotient`
- `\ -- Remainder`

Precedents

- Nasty surprise – there is no mathematical precedents rules!!! ☹
- All ”complex” formulas must be parameterized to make the expression non-ambivalent
  - `x := 2 * y + 1 -- IS ILLEGAL`
  - `x := (2 * y) + 1 -- Is legal`

Conditionals - IF

- `IF` <<condition> <expression>>+
- ONE condition must be true!!!
  - Otherwise the process stops

```
IF
  n < 0
    sign := -1
  n = 0
    sign := 0
  n > 0
    sign := 1
```

```
IF
  n < 0
    sign := -1
  TRUE
    sign := 1
```

Interval IF

- ```
  IF
     i=0
       j:=2
     i=1
       j:=1
     i=2
       j:=0
  ```
- ```
  IF k = 0 FOR 2
     k=i
       j=2-k
  ```

CASE

- `CASE` is simply another for for `IF` – so it's not directly related to case or switch in other languages
-
```
CASE i
   1
      j:=0
   2
      j:=1
   ELSE
      j:=0
```
- However `CASE` is much faster than `IF`

While

- `WHILE` boolean
  process
- `WHILE a<0`
  `a:=1`

Channels

- Channels connects processes and are the basis for the Communication part of the CSP implementation
- Channels are all rendez-vous

Channels

- Channels are of a given type
  - `CHAN OF INT q:`
  - `CHAN OF ANY link:`
  - `[n+1] CHAN OF ANY links:`

Send !

- Send the value of a variable down a channel
- <channel> ! <value>
- `ch ! y + 1`
- A set of values can also be sent
  - `ch ! x; y; x + y`

Receive ?

- Receive from channel into a variable
- ? <variable>
- `Ch ? X`
- A set of values can also be received
  - `ch ? x; y; z`

SEQ

- A sequential block of code can be defined by a `SEQ` statement
-
```
IF
  c < 2
    SEQ
      a:=1
      b:=2
  TRUE
      c:=3
```

PAR

- Parallel blocks of code can be defined using PAR
- After a PAR each line of code is an individual process
- IF

```
IF
  c<2
    PAR
      a ! 1
      b ! 2
  TRUE
    PAR
      a ? x
      b ? y
```

PAR

```
PAR
  a ? x
  a ! 2
```

What does this mean???

```
x:=2
```

ALT

- One statement from an block of code can be executed (non-deterministic) using the `ALT`
- `ALT`

```
  C1 ? x
    Cout ! x
  C2 ? x
    Cout ! x
```

PRI ALT

- Processes in an ALT may be prioritized and we can ask Occam to choose the highest priority in case more than one process is able to run
-
```
PRI ALT
  C1 ? x
    Cout ! x
  C2 ? x
    Cout ! x
```

SEQ (again)

- Using replicators SEQ also doubles as a for loop constructor
-
```
SEQ i = 0 to 10
  j := j + i
```

Timeout

- Timers can be used to timeout blocking operations
- Timers are a type like all others
- `TIMER t:`

Timeout

```
VAL one.sec IS 15625: -- ticks in second
INT begin.time:
TIMER time:
SEQ
  -- some code
  time ? begin.time
  PRI ALT
    Ch ? y
      p1 -- some process
    time ? AFTER begin.time + one.sec
      SKIP
```

Skip

- The Occam instruction corresponding to NOP
- Simply used to make the process continue without any operation
- Typically used after an IF or a timeout

Stop

- `STOP` - do nothing and never terminate the process, i. e., never get to the next process.

Replicators

- An interval called a replicator can be added to the keywords
  - `SEQ`
  - `PAR`
  - `IF`
  - `ALT`

Replicated SEQ

```
SEQ i = 0 to 10
  ch ! i
```

Much like a FOR loop – only the loop variable is local to the scope

Replicated PAR

```
PAR i = 0 to 10
  ch[i] ! 42
```

This way we can send to 10 channels as they become ready
We only finish after they have all completed!

Replicated IF

```
IF i = 0 to 10
  x[i]\2 = 0
    ch ! x[i]
```

This way we can send all even values in down a channel

Replicated ALT

```
PRI ALT i = 1 FOR 10
    Ch ! y
      p1 -- some process
    time ? AFTER begin.time + (i*one.sec)
      SKIP
```

This way we can attempt a send 10 times before we finally give up

Procedures

- We can structure out programs further by using procedures
- **Call by reference!**
- PROC <name> {(params)}<body>:
- `PROC add.one(INT param)`

```
  param:=param+1
:
```

Call by value

- Call by value can be forced by adding the VAL keyword before a parameter
-
```
PROC add.one(VAL INT param)
  new.param:=param+1
: -- this is now pointless:)
```

A Procedure Example

```
PROC Average ([]REAL32 Data, REAL32 Res)
  SEQ
    Res:=0.0
    SEQ i = 0 for SIZE Data
      Res := Res + Data[i]
    Res := Res/(REAL32 ROUND (SIZE Data))
:
```

Libraries

- Include header files
  - #INCLUDE "hostio.inc"
- Use libraries
  - #USE "hostio.lib"

End of part one

I hope☺

Hello World

```
PROC hello.world (CHAN OF BYTE keyboard, screen, error)
  --{{{
  SEQ
    screen ! 'H'
    screen ! 'e'
    screen ! 'l'
    screen ! 'l'
    screen ! 'o'
    screen ! ' '
    screen ! 'W'
    screen ! 'o'
    screen ! 'r'
    screen ! 'l'
    screen ! 'd'
    screen ! '*c'
    screen ! '*n'
  --}}}
:
```

Hello World (2)

```
PROC hello.world (CHAN OF BYTE keyboard, screen, error)
  --{{{
  VAL []BYTE greeting IS "Hello World*c*n":
  SEQ i = 0 FOR SIZE greeting
    screen ! greeting[i]
  --}}}
:
```

Hello World (3)

```
#USE "course.lib"

PROC hello.world (CHAN OF BYTE keyboard, screen, error)
  --{{{
  out.string ("Hello World*c*n", 0, screen)
  --}}}
:
```

Echo

```
#INCLUDE "consts.inc"

PROC echoing (CHAN OF BYTE keyboard, screen, error)
  --{{{
  BYTE ch:
  SEQ
    ch := ' '
    WHILE ch <> 'Z'
      SEQ
        keyboard ? ch
        screen ! ch
        screen ! FLUSH
    screen ! '*c'
    screen ! '*n'
  --}}}
:
```

A simple FIFO buffer

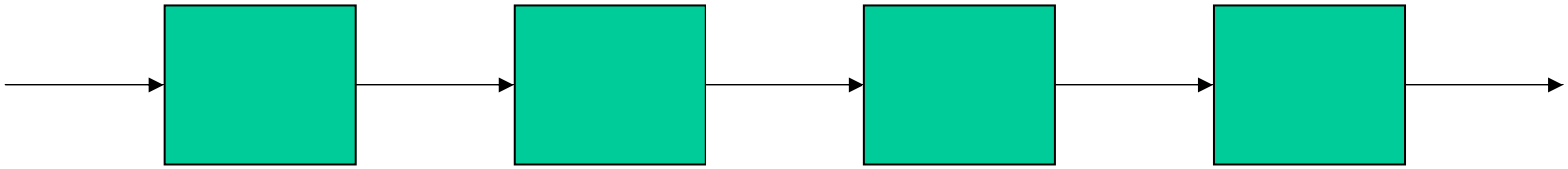

A simple FIFO buffer

```
VAL INT N IS 4:
[N + 1] CHAN OF INT C:
PAR P = 0 FOR N
  INT Value:
  WHILE TRUE
    SEQ
      C[P] ? Value
      C[P + 1] ! Value
```

Compile time limitations

```
INT N.PROC:
SEQ
  Ch ? N.PROC
  PAR P = 0 FOR N.PROC
     par.process
```

```
INT N.PROC:
VAL INT MAX IS 100:
SEQ
  Ch ? N.PROC
  IF N > MAX
    STOP
  PAR P = 0 FOR N.PROC
     par.process
```

Sieve in Occam

- Generate Prime numbers
  - With a lot of processes ☺

Sieve in Occam

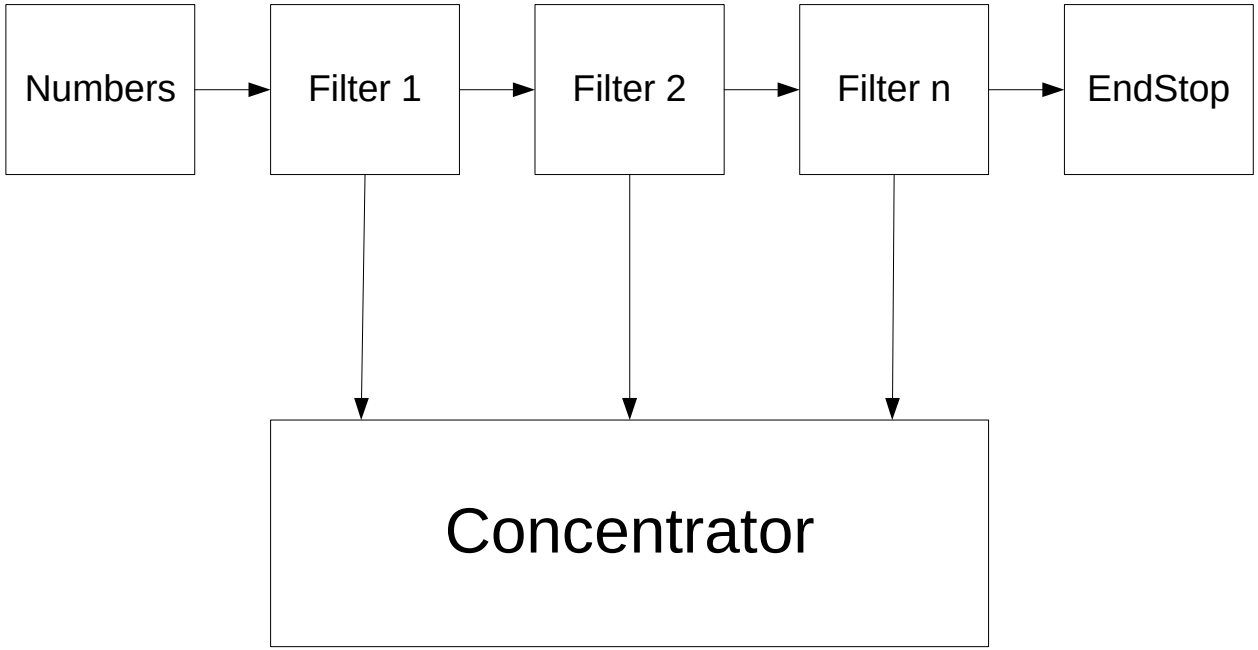

Numbers

```
PROC Numbers(CHAN OF INT in, out)
  INT i:
  SEQ
    i:=2
    WHILE i <> EndToken
      PRI ALT
        in ? i
          SKIP
        TRUE & SKIP
           SEQ
             out ! i
             i := i+1
:
```

EndStop

```
PROC EndSTOP(CHAN OF INT in, out)
  INT temp:
  SEQ
    in ? temp
    PAR
      out ! EndToken
      WHILE temp <> EndToken
         in ? temp
:
```

Filter

```
PROC Filter(CHAN OF INT left, right, down)
  INT p,q:
  SEQ
    left ? p
    q:=1
    PAR
      down ! p
      WHILE q <> EndToken
        SEQ
          left ? q
          IF
            q = EndToken
               SKIP
            (q\p)<>0
              right ! q
            TRUE
               SKIP
  right ! EndToken
:
```

Concentrator

```
PROC Concentrator([]CHAN OF INT in,
                  CHAN OF INT out)
  INT p:
  SEQ i = 0 FOR SIZE in
    SEQ
      in [i] ? p
      out ! p
:
```

Sieve

```
VAL INT N is 30:
PROC Generate(CHAN OF INT Primes)
  VAL INT EndToken IS 0:
  PROC Numbers(CHAN OF INT in, out)
  PROC EndSTOP(CHAN OF INT in, out)
  PROC Filter(CHAN OF INT, left, right, down)
  PROC Concentrator([]CHAN OF INT in,
                    CHAN OF INT out)
  [N+1]CHAN OF INT InterFilter:
  [N]CHAN OF INT PC:
  CHAN INT OK.STOP:
  PAR
    Numbers(OK.STOP, InterFilter[0])
    PAR i = 0 FOR N
      Filter(InterFilter[i], InterFilter[i+1], PC[i])
    EndStop(InterFilter[N], OK.STOP)
    Concentrator(PC, Primes)
:
```

http://wotug.ukc.ac.uk/ocweb/

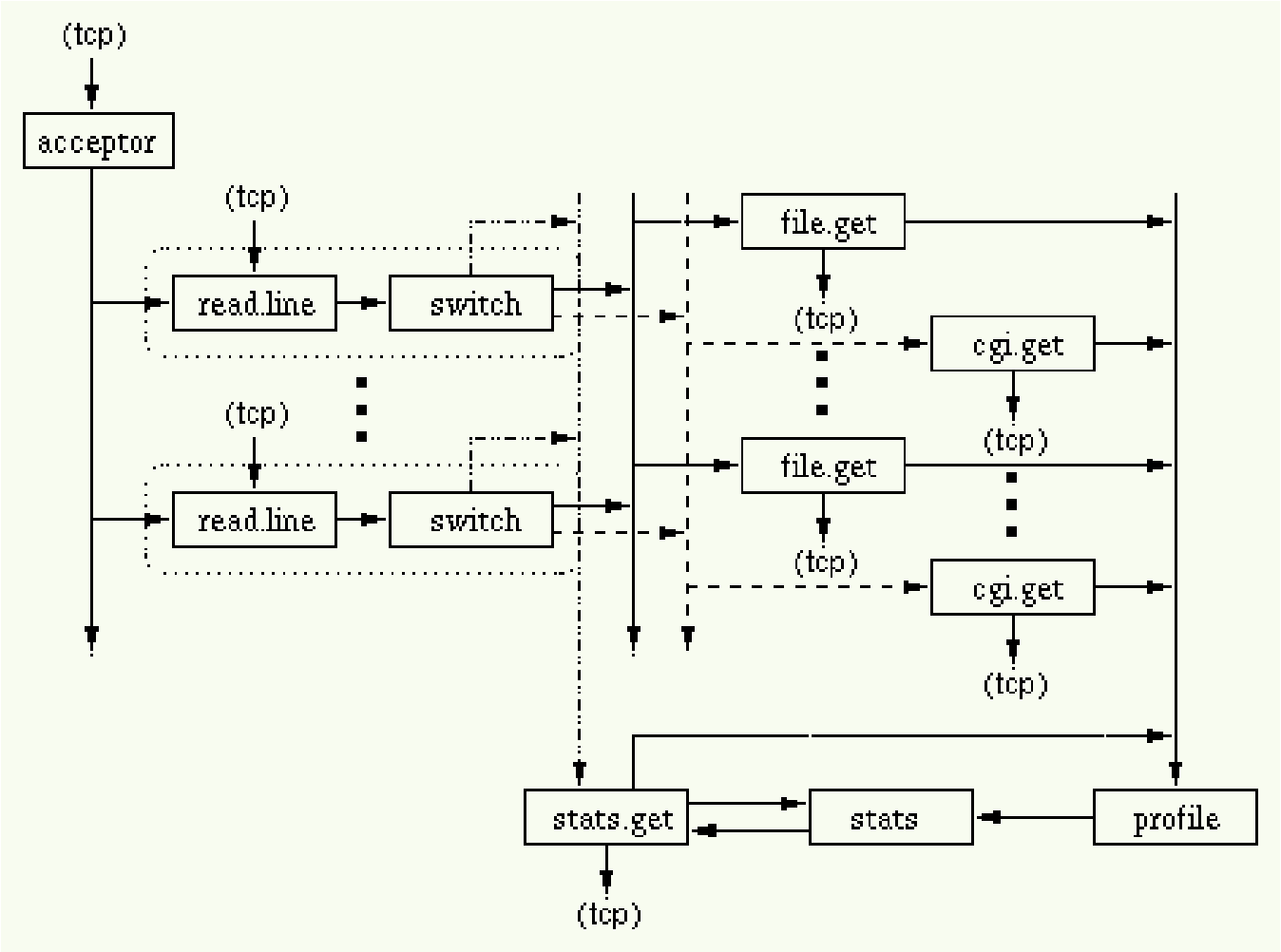

ocweb Performance

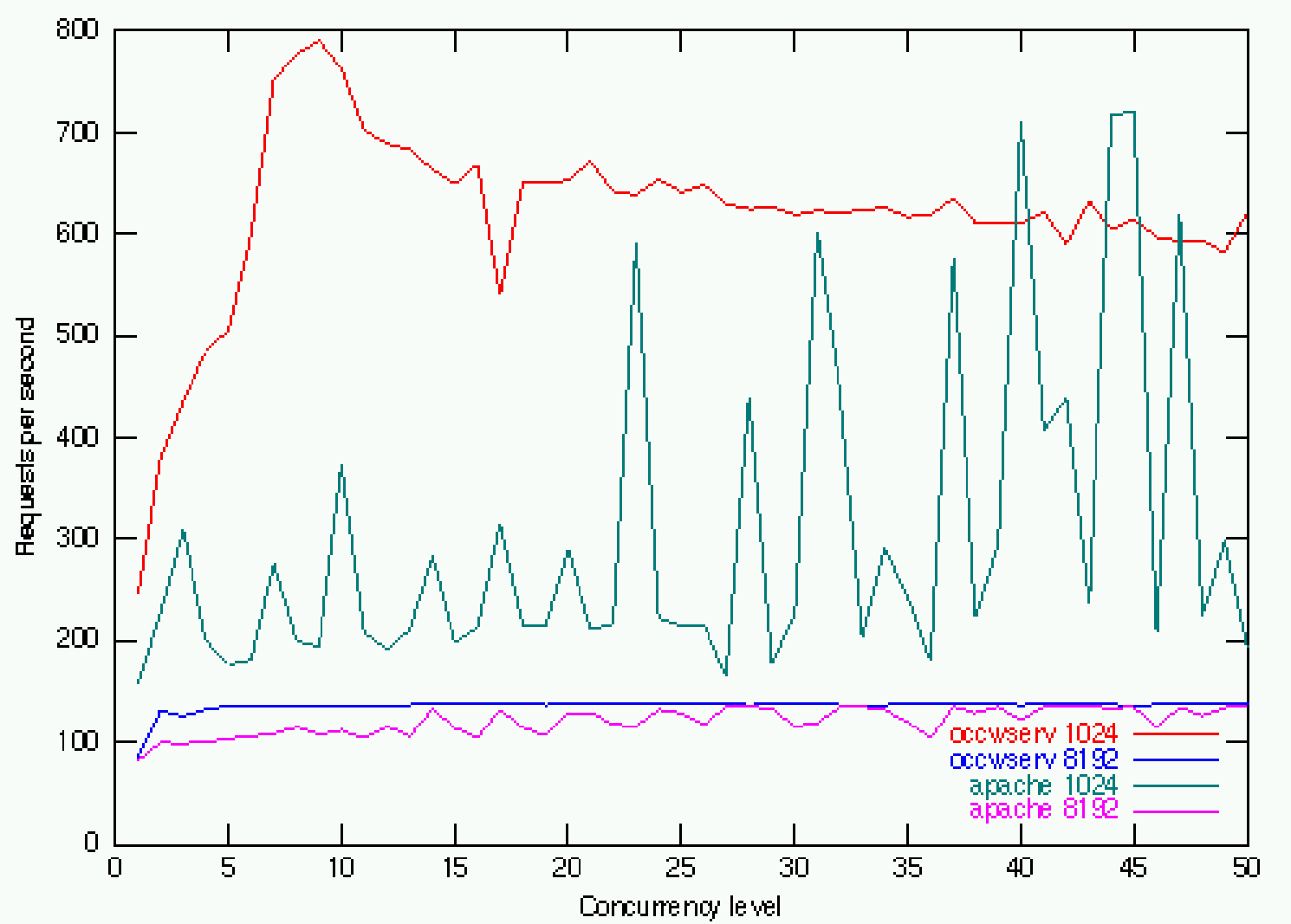

Occam for Linux

- KRoC
  - http://www.cs.ukc.ac.uk/projects/ofa/kroc/
- Single threaded
- Easy to use

Occam OS

- KRoC runtime library ported to be an operating system in its own right
- Project a collaboration between
  - UKC
  - SDU

Conway's Game of Life